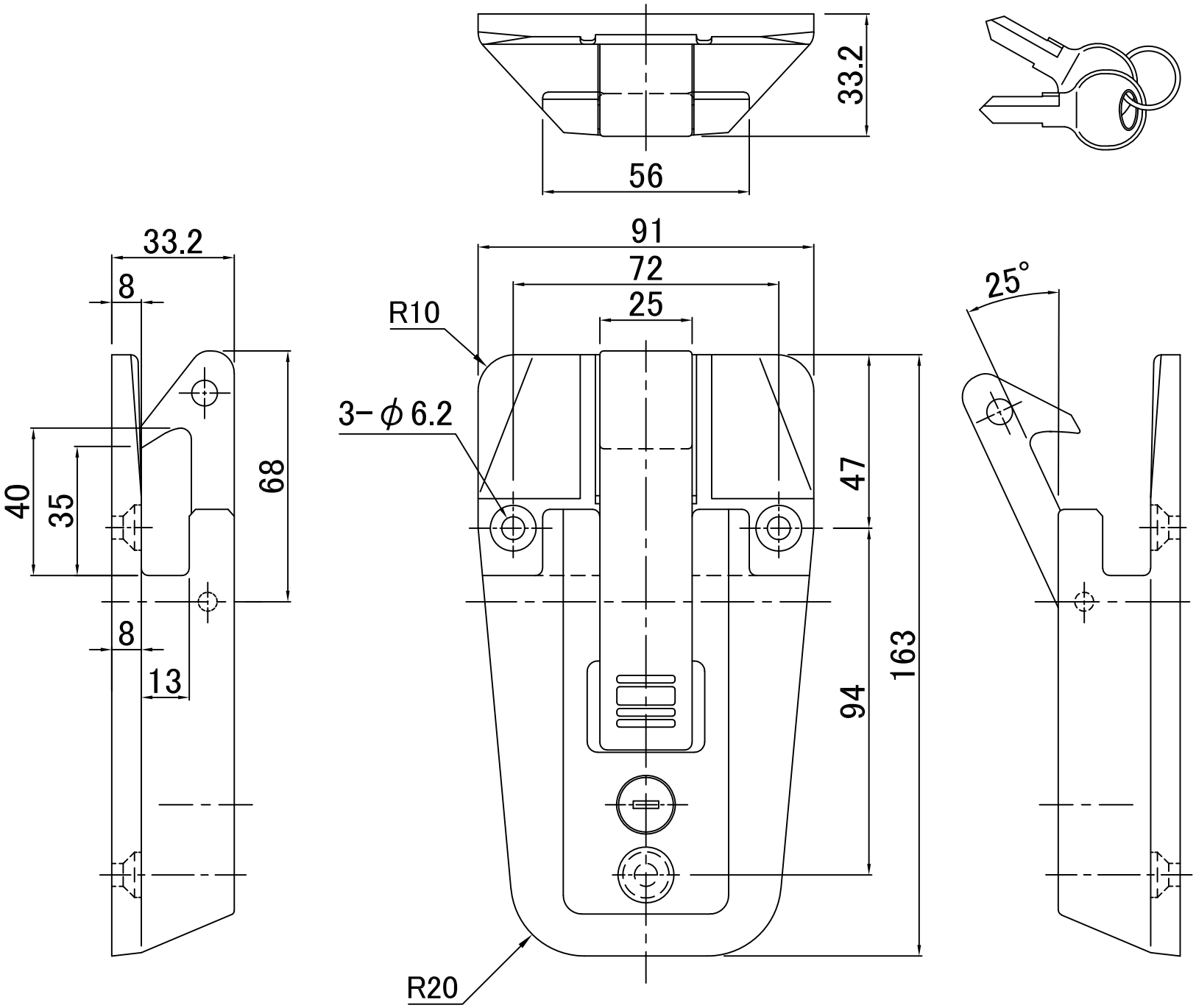
33.2
56
33.2
8
40
35
68
8
13
91
72
25
R10
3-φ6.2
47
94
163
R20
25°