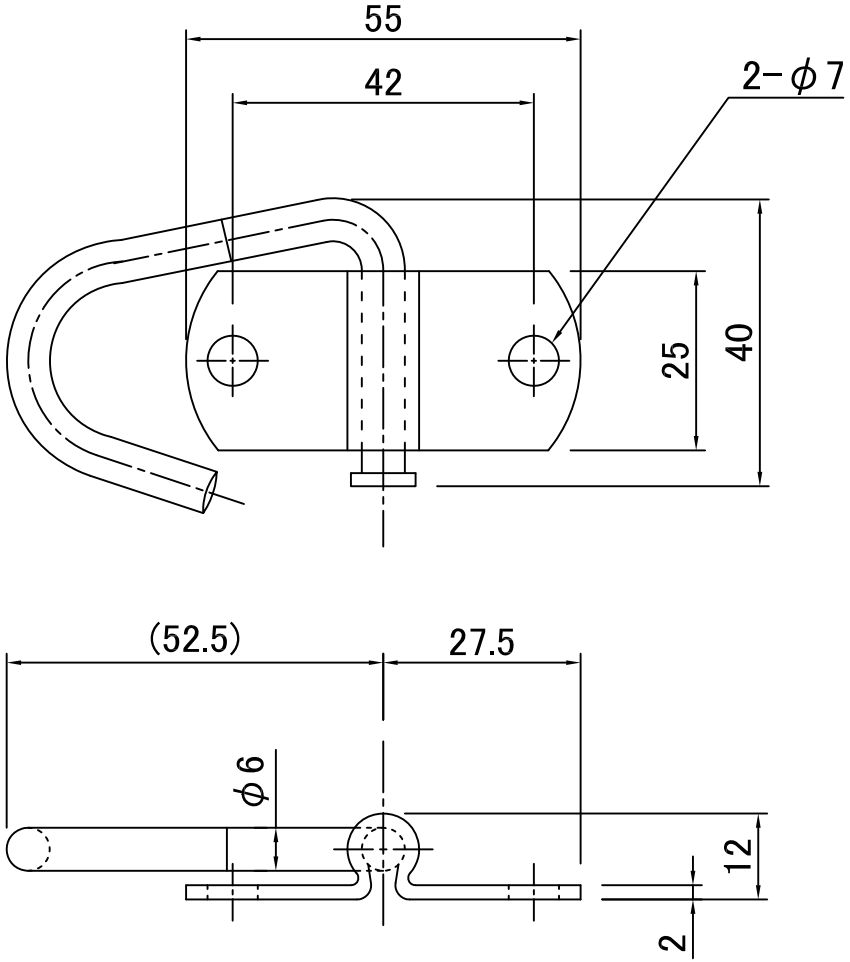
55
42
2−φ7
25
40
(52.5)
27.5
φ6
12
2