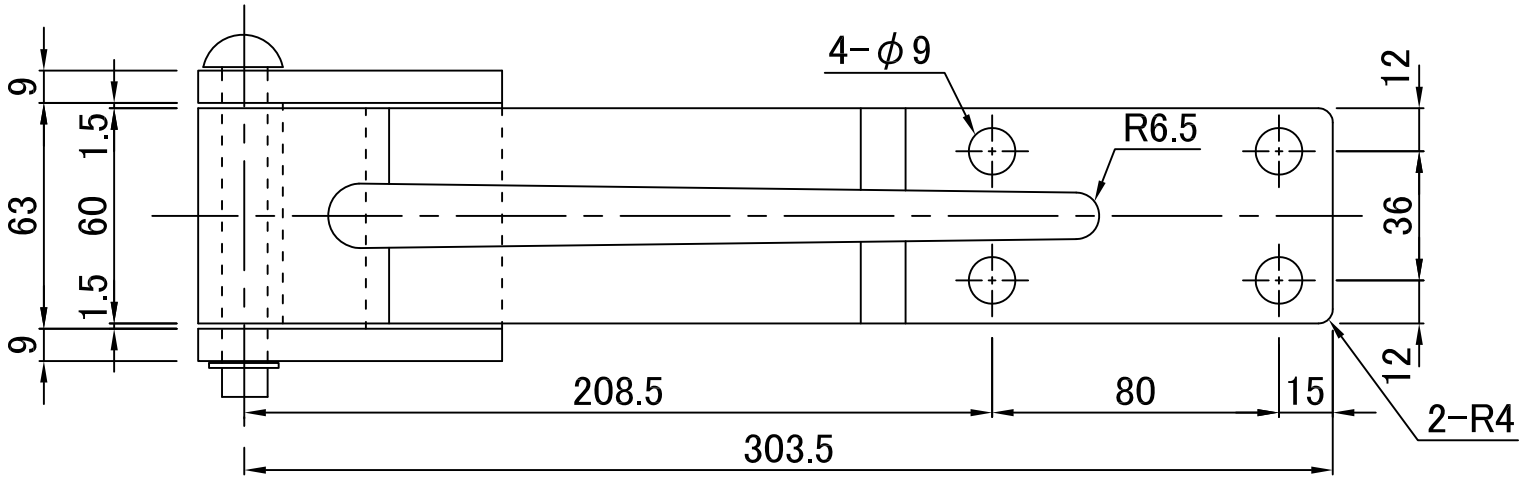
4−φ9
R6.5
9
1.5
63
60
1.5
9
12
36
12
208.5
80
15
2−R4
303.5

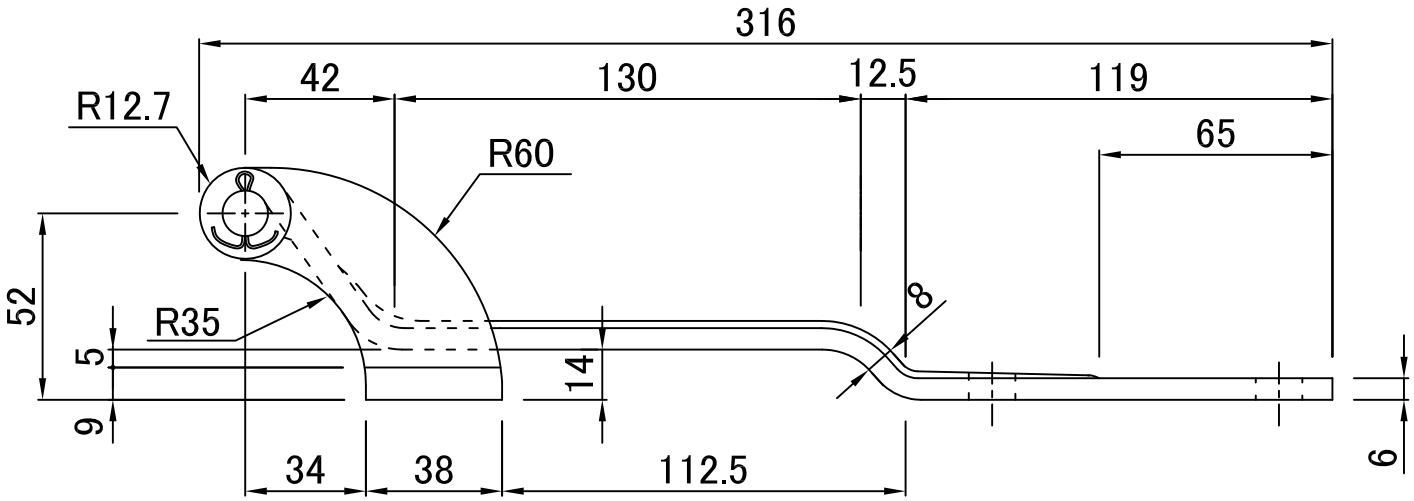
316
42
130
12.5
119
65
R12.7
R60
R35
52
5
9
14
8
6
34
38
112.5